# Protecting Older Occupants in Vehicles

NTSB Forum
on
Safety Mobility and Aging Drivers

9 November 2010

Stephen W. Rouhana, PhD, FSAE
Ford Motor Company
Senior Technical Leader for Safety
Research and Advanced Engineering

# US Driver Fatality Rate and Age

(Per 100 million miles of vehicle travel)

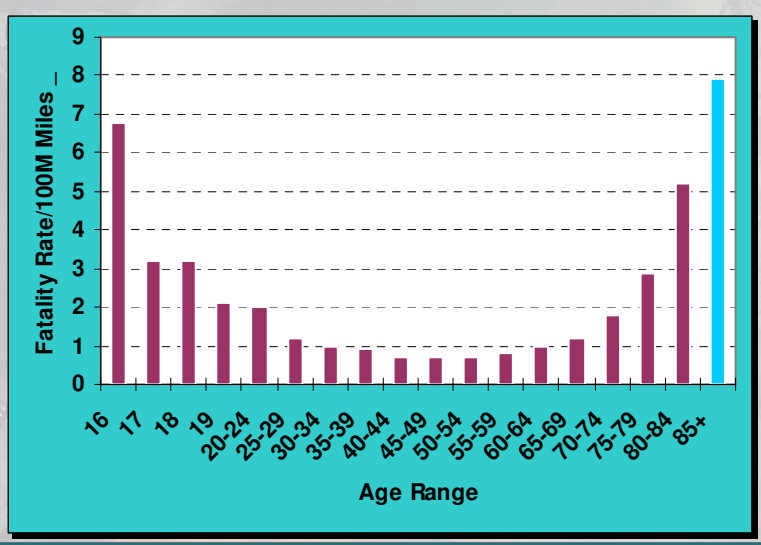

# Belt Loading and Age

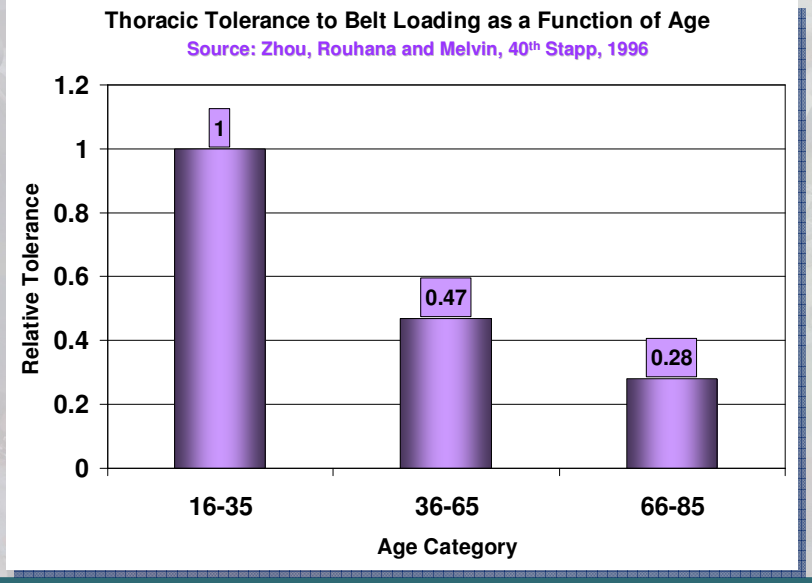


# Chest Injury Risk and Age

Source: Laituri, Prasad, Sullivan, Frankstein, and Thomas (2005-01-0297)

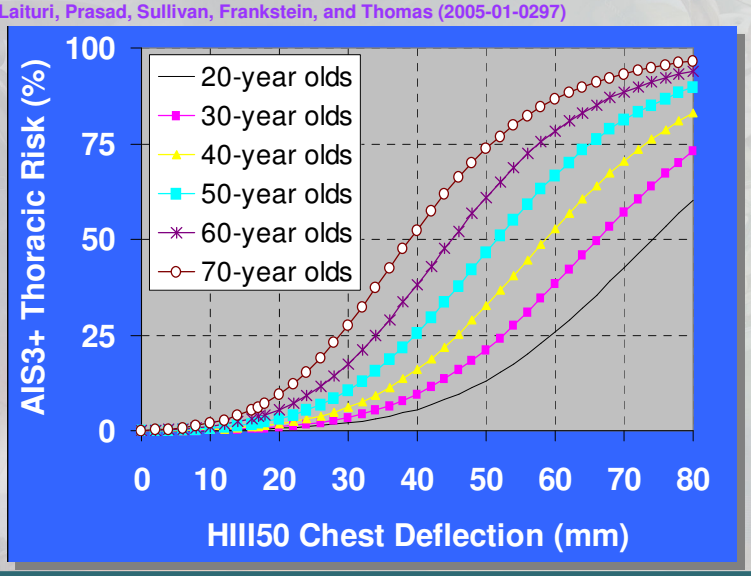

## Question

- Is there a way to help reduce the chest injury risk for older occupants?

Answer:

Maybe with an Inflatable Belt…

## What is an Inflatable Belt?

- A tubular airbag sandwiched between two pieces of shoulder belt webbing

- In the event of a crash, the airbag inflates across the chest in 10 – 20 ms

# Current System Configuration

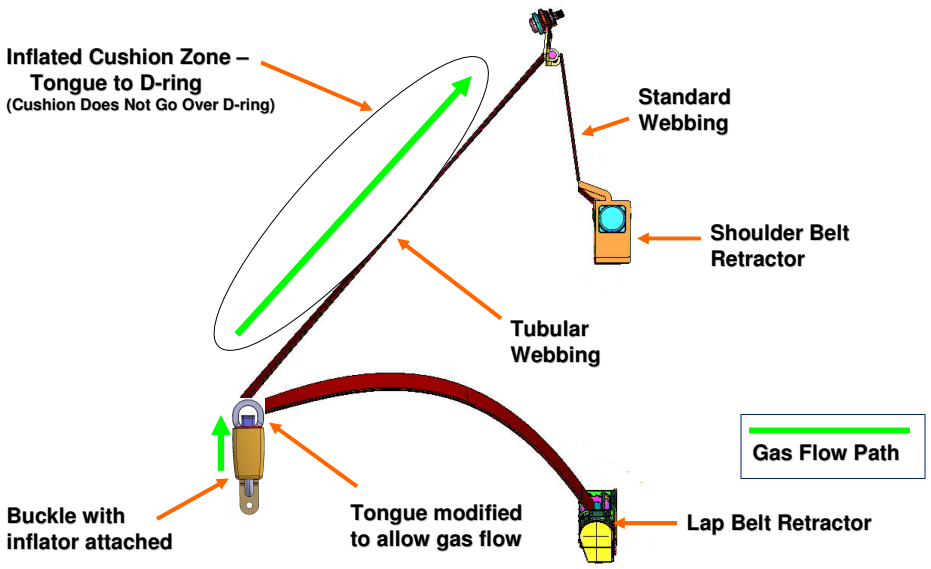


# Component Detail

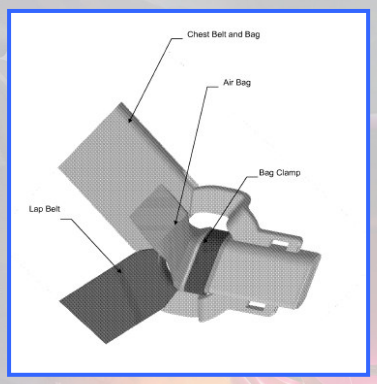


Latch Plate

Buckle and Inflator

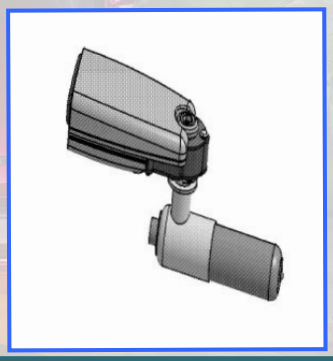

## Inflation

Ford Motor Company

Inflatable Seat Belts
"Inflator Sequence"

## Sled Test

## IB Potential Benefits

- Inflation of the airbag portion of the belt and the associated increased size, pretensioning, and load-limiting should:
  - help reduce occupant head excursion
  - help limit occupant neck loads
  - help distribute belt load over more of the chest, reducing pressure & risk of chest injury

## Frontal Impact - Adult

*Rear Seat Sled Test - H3-50M, FMVSS 208 Pulse, 26g*

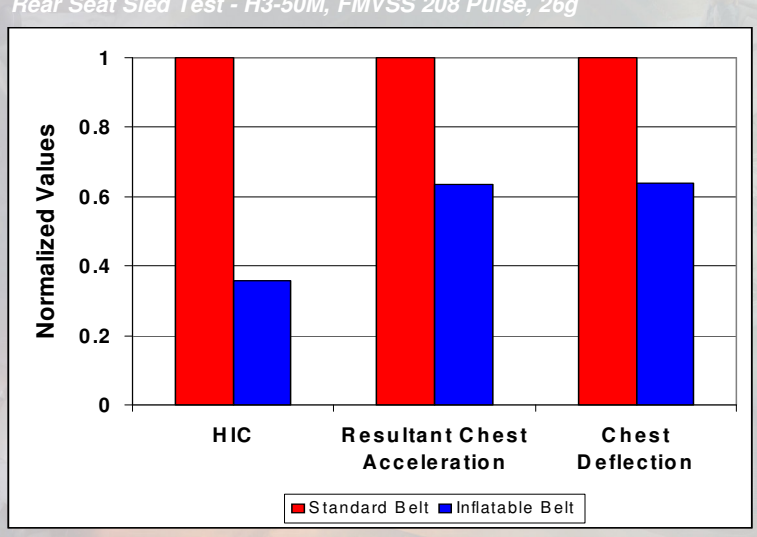

## A Ford First – Inflatable Seat Belts!
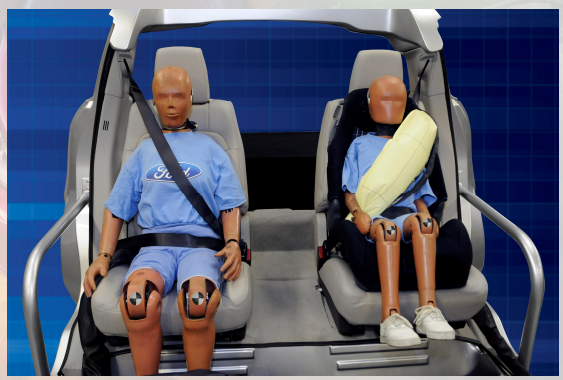
- Going Into Production on:
  - 2011 Model Year Ford Explorer
- Optional in 2nd Row Outboard Seats